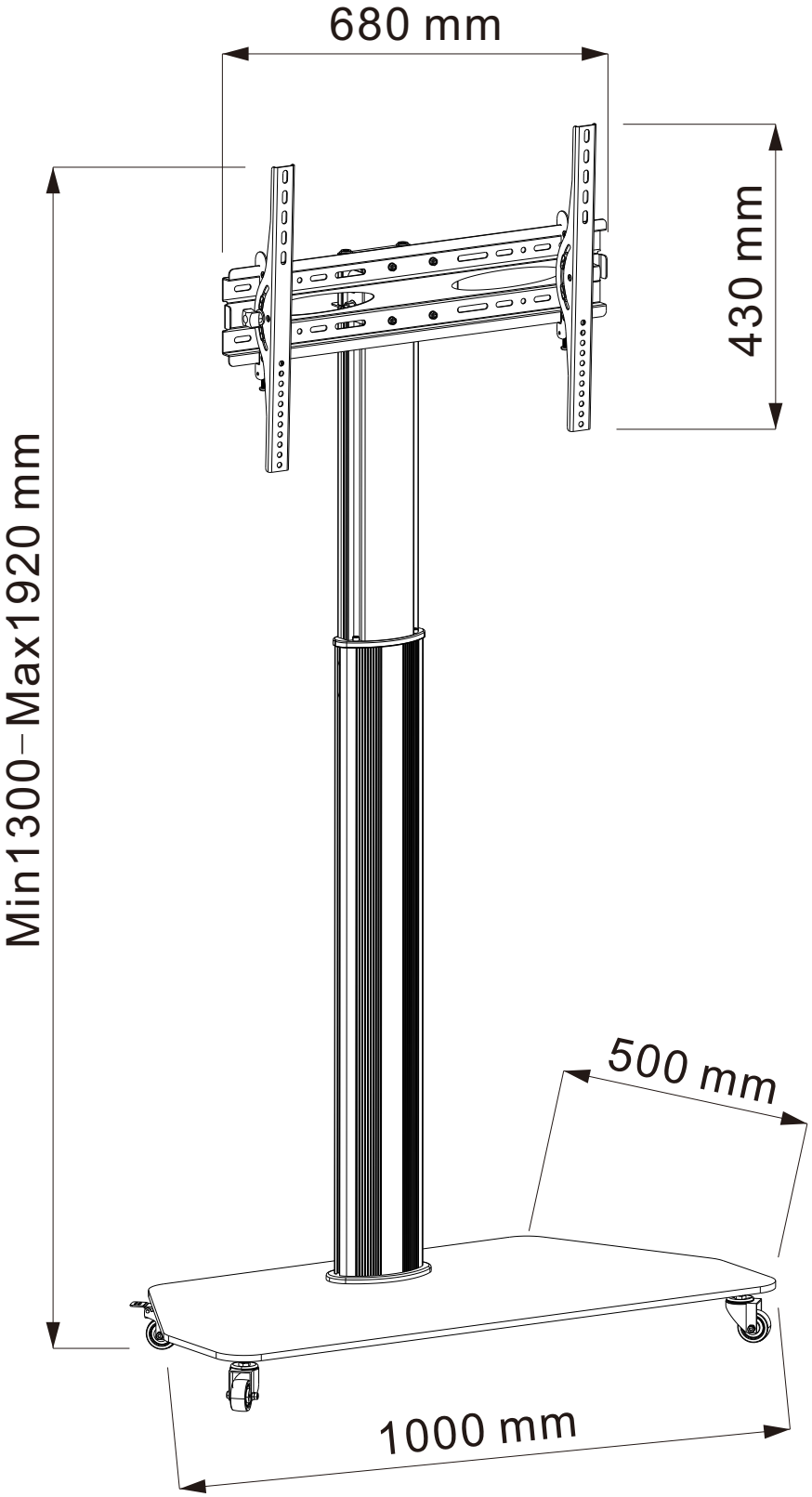
680 mm
430 mm
Min1300–Max1920 mm
500 mm
1000 mm